Breakout Session with discussion:
LGD Benchmark Model

-using Machine Learning
-based on GCD data template

Occasion:	GCD Conference at HSBC London
Presenters:	Jeroen Berends HSBC
	Thomas Aldheimer FCG
Moderator:	Philip Winckle FCG
Date:	2022-11-08

Important Cautions:

Disclaimer: Any views expressed in this presentation are those of the presenters and do not necessarily represent the views of HSBC, FCG, Global Credit Data or any of its members.

Anti-trust warning: Participants are warned not to provide sensitive information about their bank or to engage in discussions which might encourage or lead to collusive behaviour. If in doubt then please seek guidance from your own bank's policies or legal counsel.

Data shown: Data used in this presentation has been modified to ensure that it does not expose the portfolio of the bank involved, while still being a good representation of the industry

Discussion Points

1. **Incomplete data fields:** remove, impute or model?
2. **High loss segments:** can this help us achieve a **wider spread** of LGDs in implementation?
3. **Segmentation and model structure**: treat important collateral and industry segments specially?
4. **dev/train/test split:** How to interpret the inevitable drop in out of time performance.
5. **Non-linear drivers:** Assumption of linearity not required in ML; is this good for modelling or an over-fit?

Discussion point 1: Incomplete data

How should we handle missing, but important, data where the field is populated for some facilities but not for others? (e.g. missing borrower financials, "unknown" industry code etc.)

- Set a special value for missing data (which potentially could be a driver)?
- Do not use less-than-complete fields? (is this reg compliant?)
- Extrapolate missing values from other fields (e.g. use limit or exposure to guess borrower turnover)

Data Field

Customer	A	B	C	D	E	F	G	H	I
1									
2									
3					?				
4							?		
5									
6	?	?							

Example of handling missing data values

Impact from data transformations

(example with missing values for Cure, Low and High classifier models)

Two main transformations were tested:

- Im**putation**: An estimated value is imputed from a model built with non-missing drivers
- **Bucketing**: Missing values are collected in a "missing bucket"

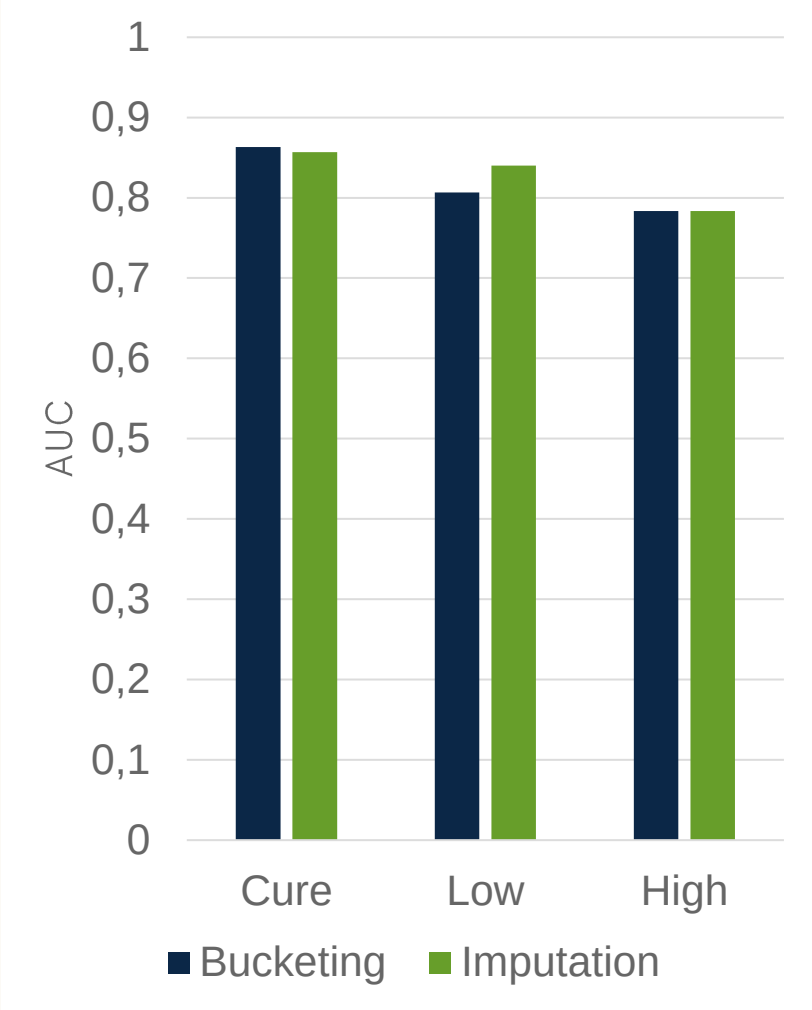

Dealing with bimodal LGD

Target Definitions and Model Structures

LGD is difficult to model as most cases are full recovery or low loss, with another small bunching of cases around full loss. This is very different to the average outcome of around 25%.

- Modelling "cure" cases separately is already regarded as good practice as it handles some of the low mode
- We tried to find drivers for the other modes of "Low LGD" and "High LGD" as well as for "Cure"

The 3 targets for "classifier" (yes/no) models were:

- **Cure** = zero nominal loss and recovery within 1 year and no sale of collateral (GCD Definition).
- **Low** = not cure and LGD < 10%
- **High** = not cure and LGD > 90%

The remainder of cases were targeted in a regression model:

- **LGD** = Observed LGD (full range or remainder of cases)

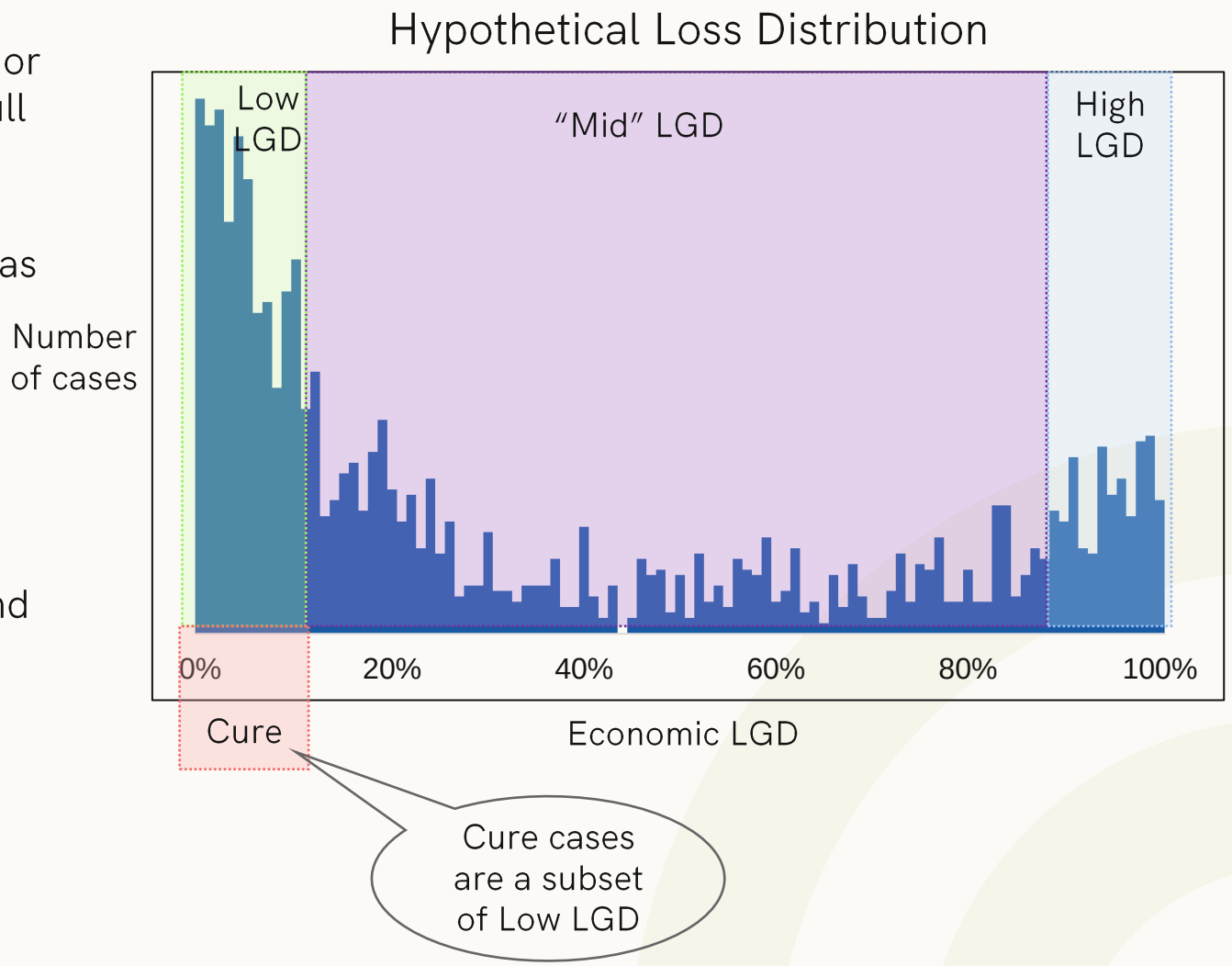

Discussion point 2: Modelling cure, high and low loss

How should the model take care of the bimodal distribution?

- Should "Cure" and "No nominal loss" cases be separated or treated together?
- If a "Cure" sub-model is approved, should it be implemented on the live portfolio as a probability of cure or as a pass/fail threshold?
- Is it similarly sensible to try to find high and low loss cases (non cure)? Have banks found predictive drivers of likelihood of high or low loss?

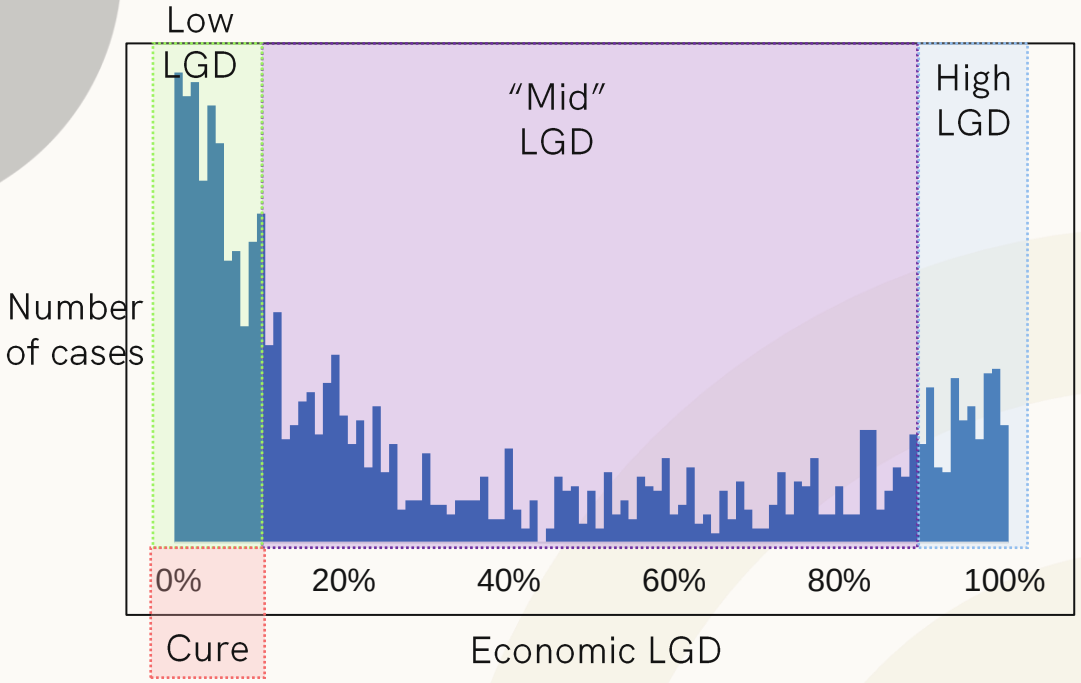

Model Structure Alternatives

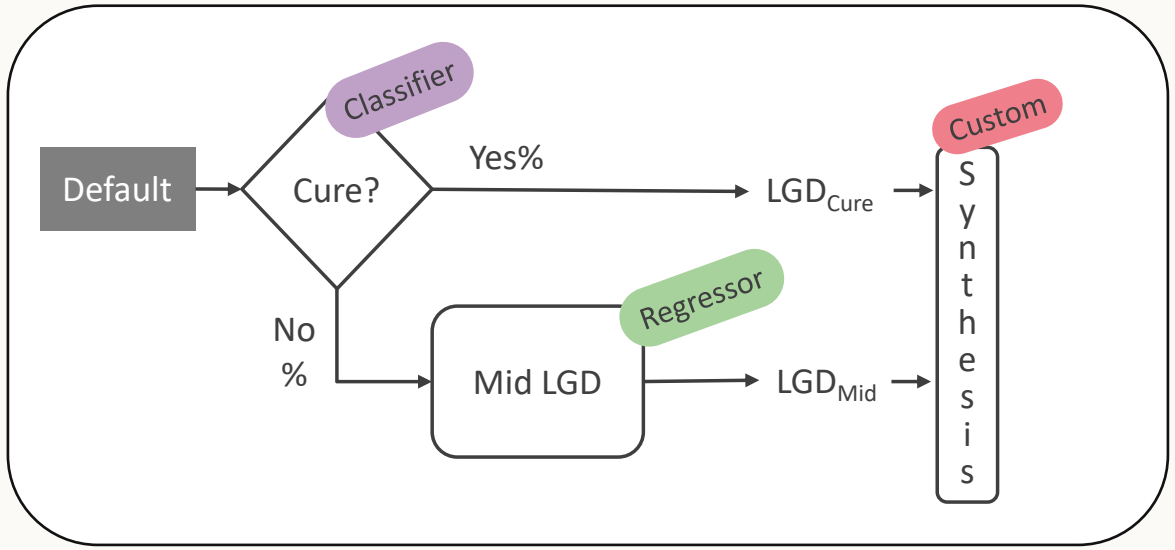

Over 20 different model structures were repeatedly tested:

Simplest, with only a cure sub-model

Adding high and low classifier sub-models

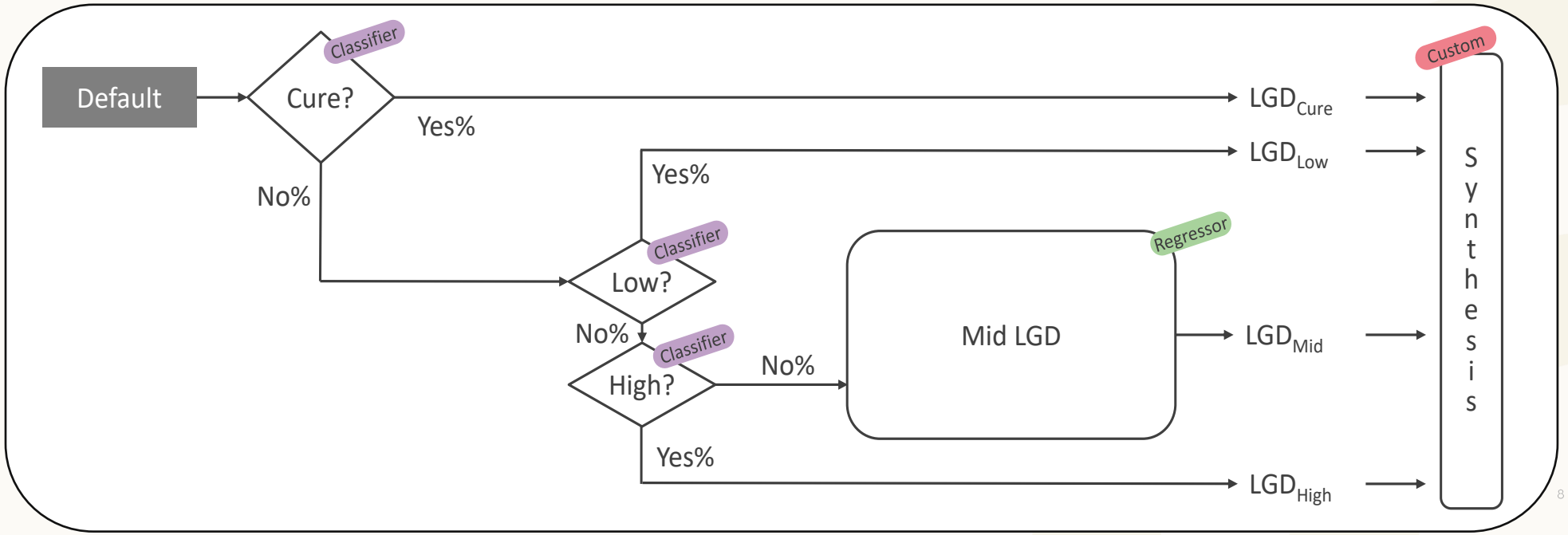

Most complex model structure

Most complex model tested, with real-estate-heavy-collateral cases broken into sub-model group:

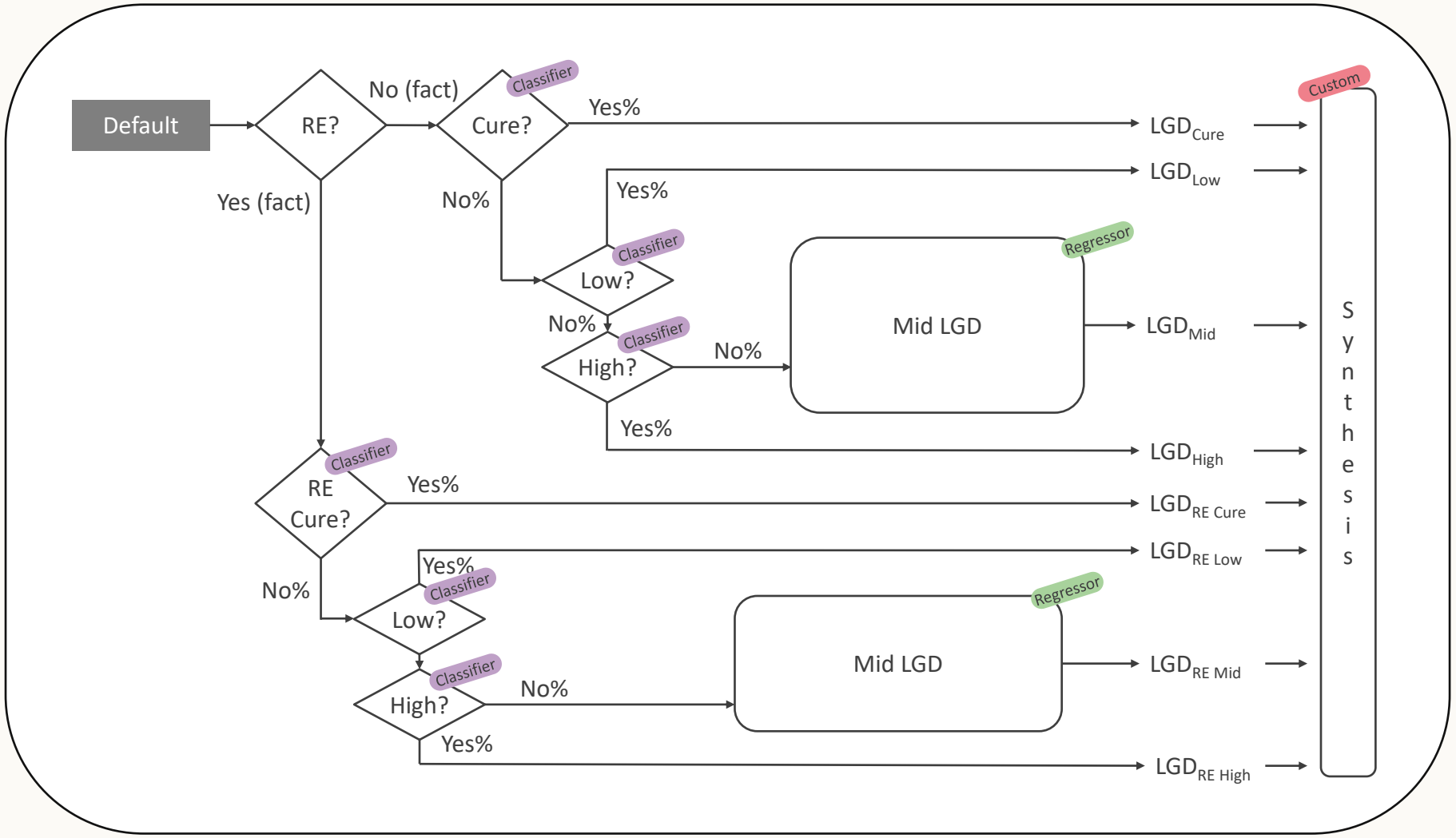

$$LGD = P(Cure) * LGD_{Cure} + (1 - P(Cure)) * \left(P(Low) * LGD_{Low} + (1 - P(Low)) * \left(P(High) * LGD_{High} + (1 - P(High)) * LGD\right)\right)$$

Adding cure, high and low sub-models

Effect on predictive power of adding complexity to the model structure?

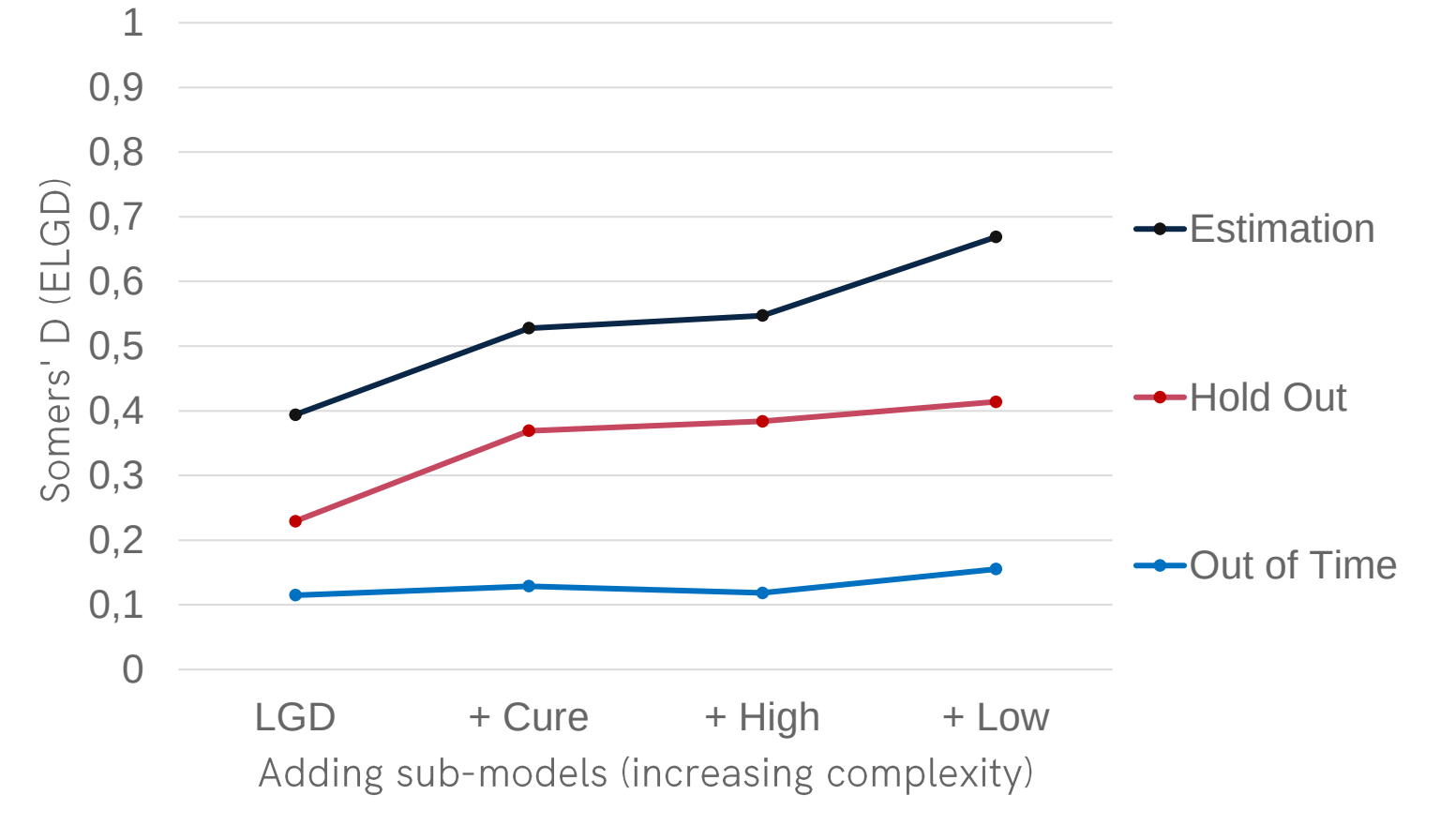

Key Points

- Adding a cure phase increases performance strongly
- The "low" model addition adds predictive power in and out of sample and time
- The "high" model (which has less observations) adds marginal value

Discussion point 3: Segmentation

How should the model structure handle "special" segments of the portfolio? (we modelled on facility level)

- Should specific industries (e.g. primary industry) be handled in a different segment of the model or allow the industry driver to take care of this?
- Certain facilities are collateral "heavy" facilities: Does it make sense to specially handle such facilities (e.g. secured vs unsecured) in different sub-models. Or just let the collateral type, presence and LTV act as drivers in the main model?

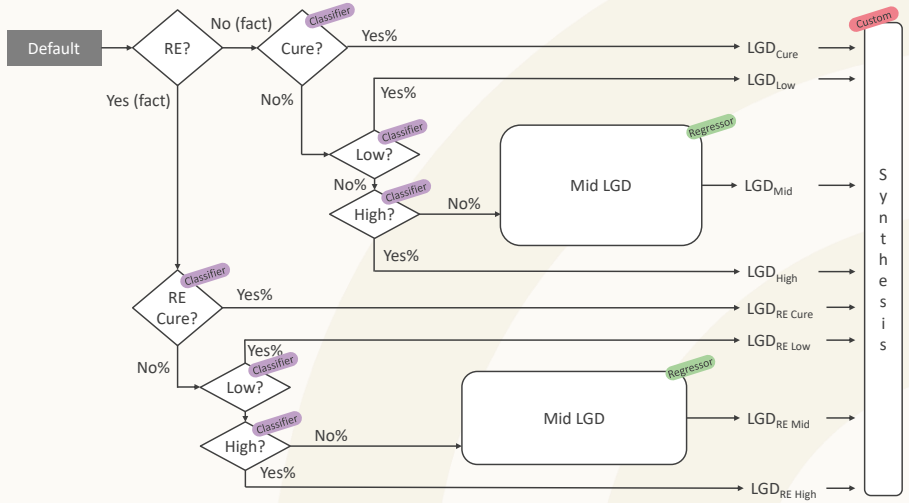

Effect of real estate collateral heavy sub-models

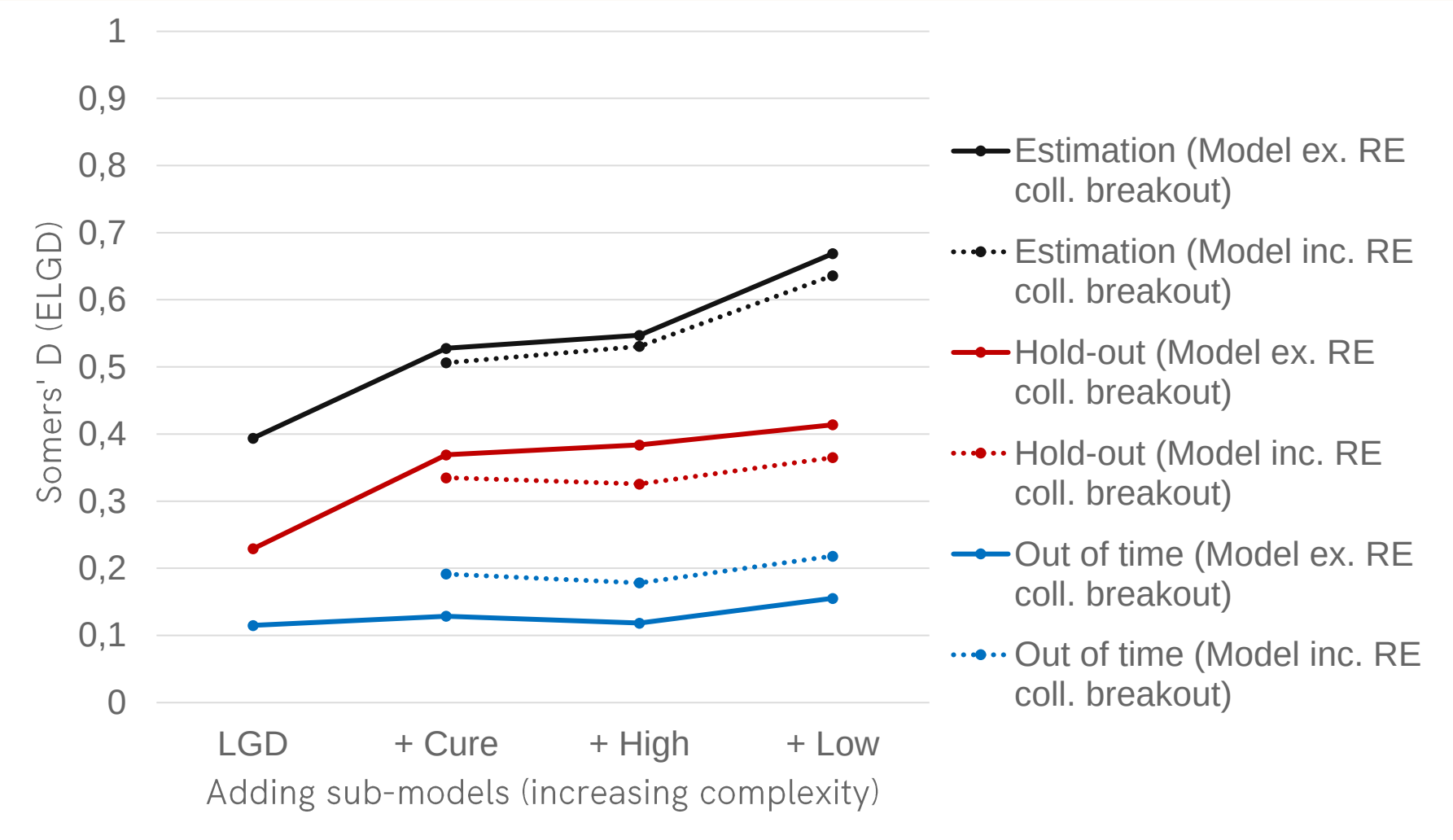

Our experience with the "real estate collateral heavy" sub-model group was mixed:

- Worse performance in estimation and hold-out
- but strong improvement in out of time.

Use Case Insights

Model Performance

What's the best performing challenger model over time?

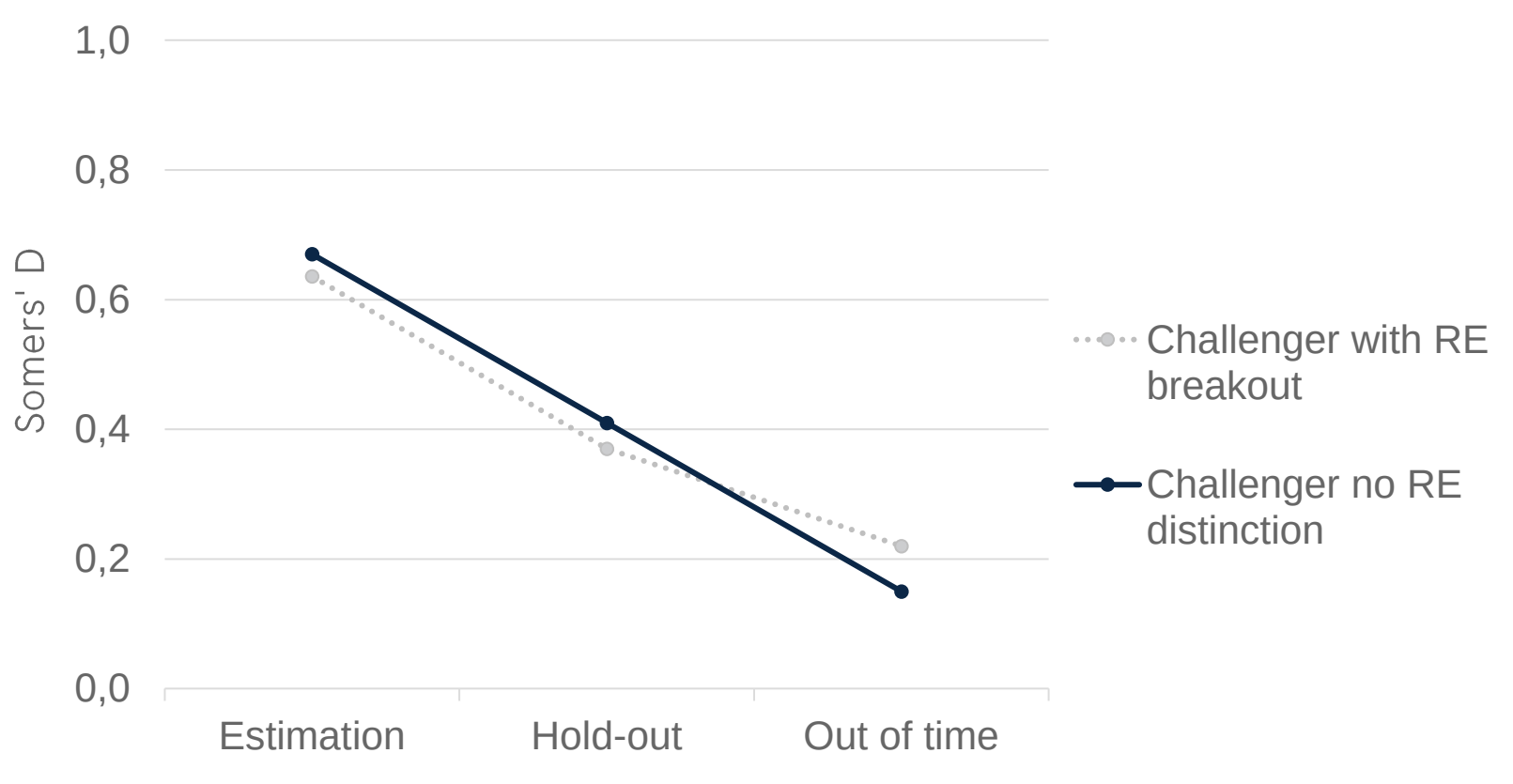

Key Points

- This challenger model details:
  - Including RE segmentation
  - Including Cure, Low and High
  - 50+ risk drivers
- The levels of performance of the challenger model can be used as a benchmark to explain the ceiling of possible model performance in discussions with a regulator
- Estimation -> Hold-out/Out of time fall off in performance (overfitting tendency) a known challenge for ML
  - Can be reduced further by being more conservative in hyperparameter optimization and reduce the number of risk drivers

*Min-Max Scaled Somers' D to [0, 1] interval

Discussion point 4: out of time, out of sight?

Use of "out of time" data is difficult for LGD as the workout period can last for many years.

- If "out of time" is most recent data, is this defined as most recent defaults or most recent recoveries or other?
- If using most recent recoveries then the data may represent many years of history
- If using most recent defaults then there is a skew to quick recoveries only

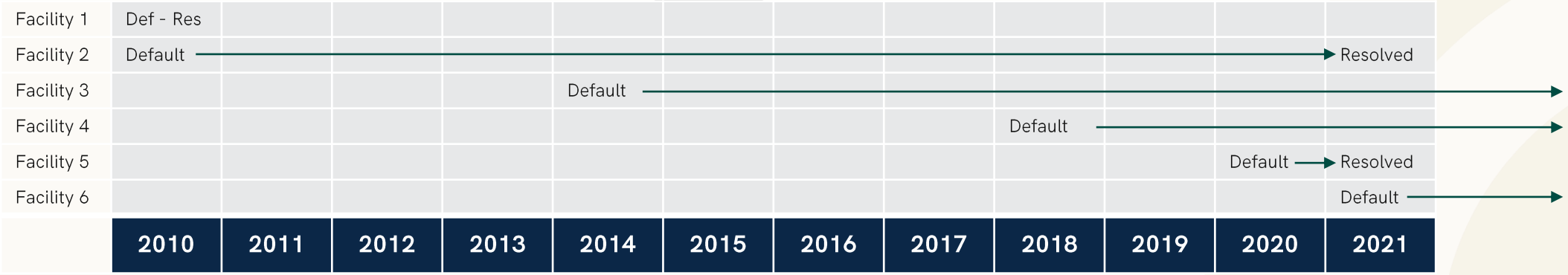

Discussion point 5: are all drivers linear?

Some drivers appear to have a non-linear relationship with the target variable (i.e. their univariate response line is bent or kinked)

- The "kinked" relationship may or may not be stable, should it be ignored and assumed linear?
- Linear regression modelling assumes this linear relationship. Is this ever examined or questioned?
- Are there examples of non-linear LGD drivers found by banks?

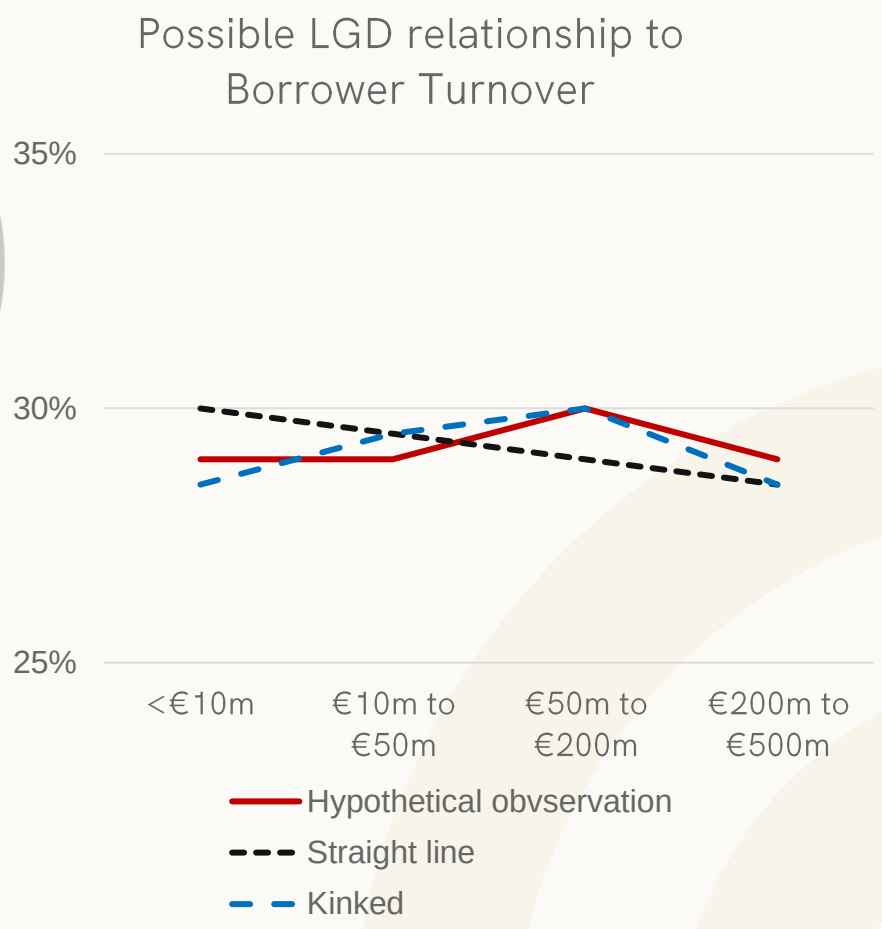

Use Case Insights

Model Performance

Non-Linear Relationships

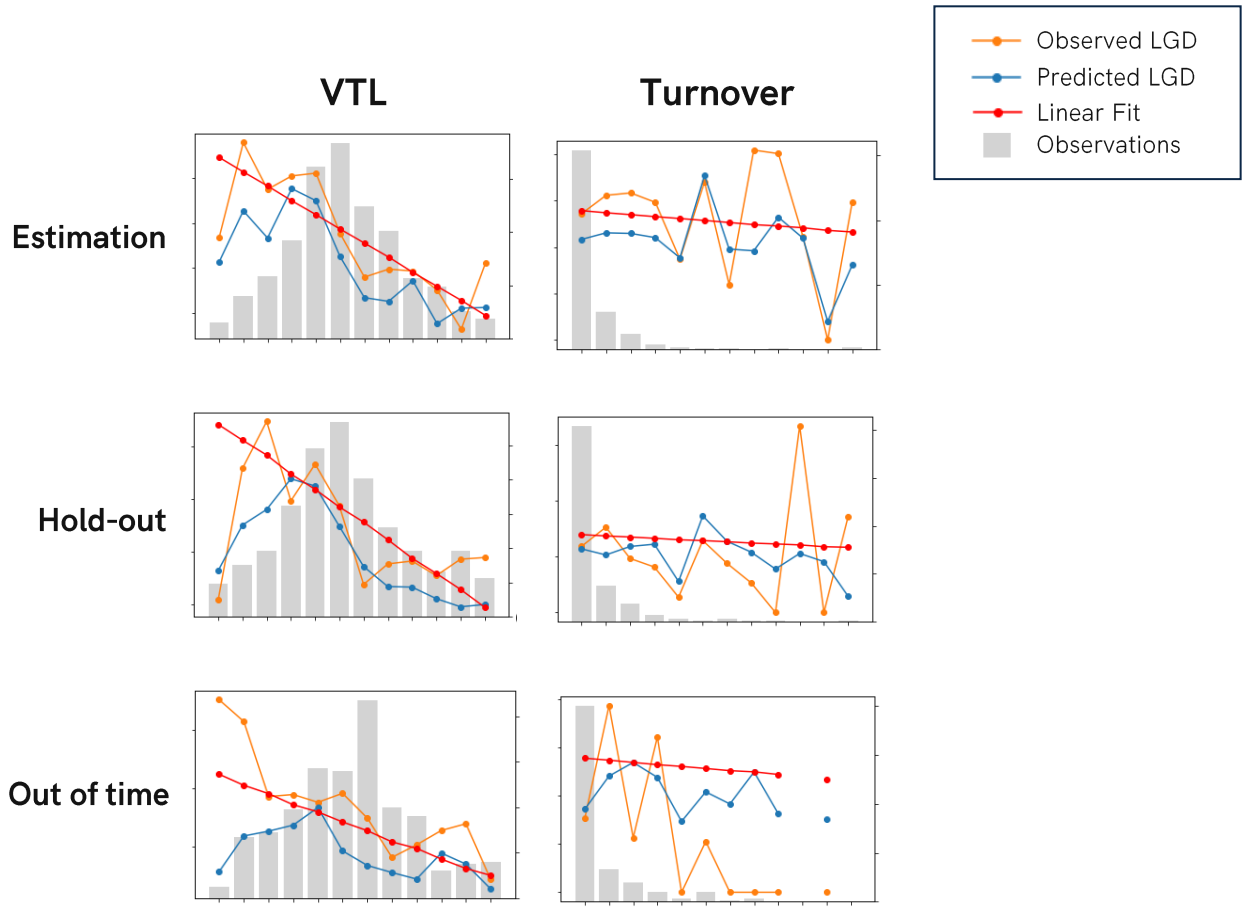

Key Points

- In most cases the specific drivers chosen by the ML method perform as we intuitively expect (which is most often linear)
- Due to using ML, there can exist a noticeable break (non-linearity) in the relationship between driver and predicted LGD. A relationship impossible to model using linear models
- The figures on this slide is an example of non-linear relationships in a risk driver. As can be seen, the ML model fit tightly to the estimation sample. Note how the behavior in the observed LGD differs in the low VTL buckets between the estimation and out of time samples
- The modeller and risk experts can assess whether the non-linear relationships are real factors of the population or just artefacts from over-fitting (an important distinction)

Appendix 1:
Benchmarking Tool on GCD Data Set

How we applied Machine Learning in the process

8 different techniques explored, including neural networks, decision trees and linear models. The best performing was "XGBoost" based on a decision tree structure.
An illustrative example of training and application of such a model:

1 Split the data and build a decision tree

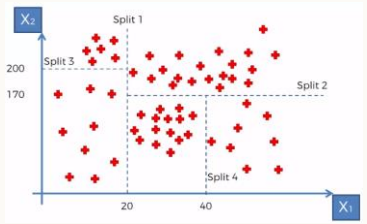

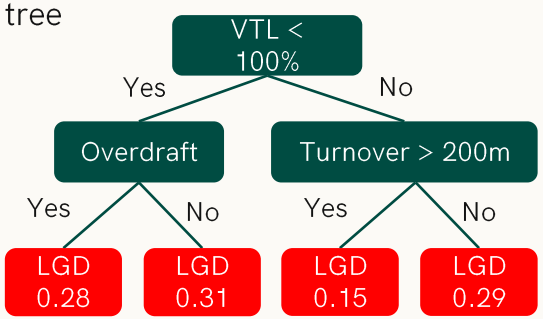

2 Create x100 different decision trees and iterate the process 500 times until an optimal structure is found:

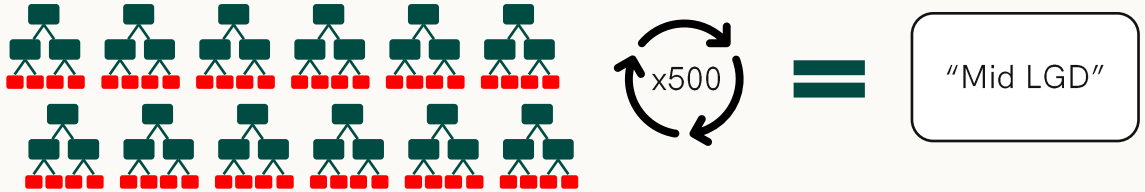

3 Use the optimal trees to make a prediction on actual data so that we can test performance:

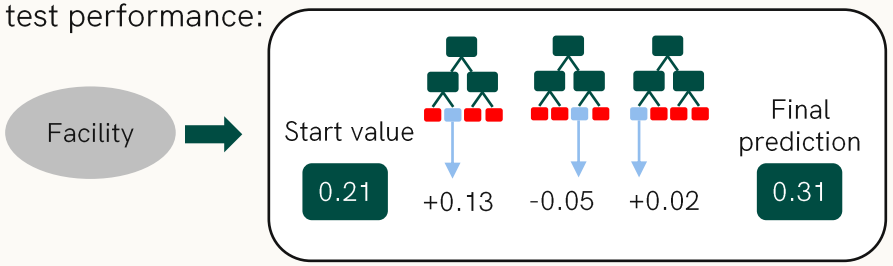

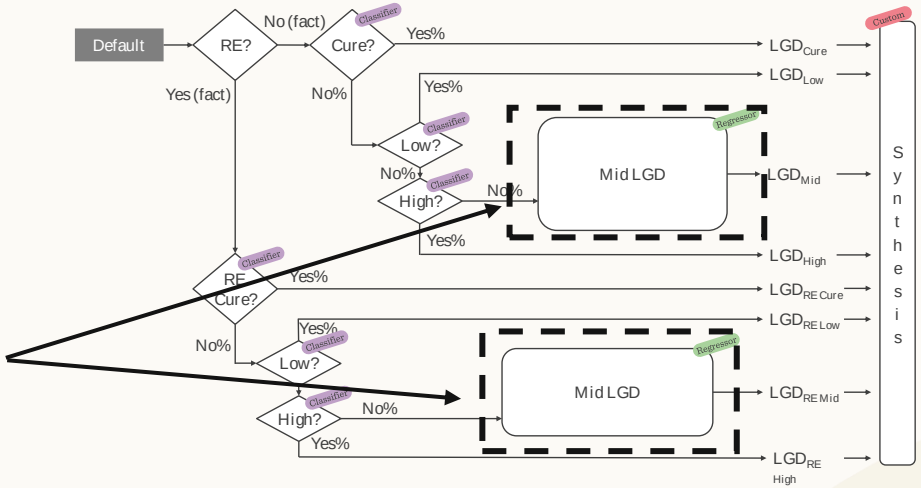

4 Repeat 1 - 3 for each sub-model

- Mid LGD predicts an LGD
- Cure, Low and High predicts a probability

5 Combine the probabilities and LGD predictions from all the sub-models into a final LGD prediction

6 Apply final model by running the live data through the tree structures which produces a non-linear outcome

Benchmarking Tool on GCD Data Set

Tool Overview

Use of framework for investigating 10,000x different LGD models

- No installations, no integration, just deliver data – return output
- Combining different data transformations, model structures, ML techniques, risk drivers
- Deliveries focus on performance comparison between combinations

Pick best performing models

- Top 5 best performing models along:
  - Rank correlation (Somers' D, Spearman)
  - Error (MAE, RMSE)
  - (Classifiers sub-models optimized on Brier score and also evaluated on AUC)
  - LGD prediction distribution (max-min diff)
  - Test samples (Hold-out, Out of time)

= near-theoretical maximum predictive performance a model could produce on this data set, a performance ceiling

Time-stability analysis

- More robust time stability analysis across multiple out of time samples or specific time periods within hold-out sample
- Top 5 best performing models along all metrics are "stressed" by being re-trained (with identical parameters and drivers) on a redefined development and out of time sets

Benchmarking Tool on GCD Data Set

FCG

Tool Overview

Leverage your *Global Credit Data* membership with machine learning

- Quick-start way to use GCD data (total data set or own bank subset).
  - For banks already having data in GCD's standard format (best practice for data), this adds a companion "off the shelf" model which builds on GCD member discussion of best practice.
- Provides much deeper risk and modelling insights directly from anonymized internal data of member banks - *an ideal "quick benchmark" tool for IRB banks,* without the need of significant resources
- Promotes state-of-the-art technology for your modelling capabilities

Machine learning for IRB models

- Increased attention from regulators (e.g. EBA discussion paper on machine learning)
- The time is right to start making more informed decisions on the future use of ML in the organization's risk modelling – we can help with that
- Possible future use in reg cap models, driven by the capital relief from superior risk models

Multiple application areas other than IRB

- IFRS9
- Stress testing
- ICAP models
- Pricing models
- Reg cap *challenger* model
- Validation

Model performance boost

- Quantifiable results, for example:
  - Improved rank correlation +30%
  - Decreased model error -10%
- Improvements to champion model (or even adoption of some parts of challenger model), for example:
  - +60% rank correlation adding a *Cure* component
  - +10% rank correlation adding a *Low* component

Appendix – Benchmarking Tool on GCD Data Set, details

FCG

Your input data

1

Use of framework for investigating 10,000x different LGD models

- No installations, no integration, just deliver data – return output
- Built in Python, computing power by AWS

It's "brute force" investigation of all possible models generated from the combinations of (with the weakest performing ones sorted out):

- ~200 data transformation combinations
- ~100 model structures with 2-8 sub-models
- ~10 machine learning algorithms / sub-model
- Iterative key driver selection process using three different feature importance evaluations (replacing traditional SFA analysis)

Deliverables from stage 1:

Fully detailed output and high:

- Performance comparison of alternative model structures
- Performance comparison of key drivers by segment and overall
- Performance comparison of data transformations
- Performance comparison to a linear benchmark model

Possible custom add-ons:

- Your own idea of model structure / sub-model
- Your own idea of data transformations
- Your own idea of performance metrics
- Your own idea of specific drivers

2

Best performing models

Top 5 best performing models along:

- Rank correlation (Somers' D, Spearman)
- Error (MAE, RMSE)
- (Classifiers sub-models optimized on Brier score and also evaluated on AUC)
- LGD prediction distribution (max-min diff)
- Test sample (Hold-out, Out of time)
- (Custom metric)

= near-theoretical maximum predictive performance a model could produce on this data set, a performance ceiling

A candidate model must fulfill:

- Sufficient minimum performance
- Sufficient stability between development and hold-out/out of time sets
- Better performance than linear benchmark

Deliverables from stage 2 and 3:

- Predictive performance and stability analysis
- Driver analysis
- Model behavior analysis (why it predicts as it does)
- Conclusions and suggestions, drawn by the results, by FCG experts
- Access to best performing models (pre-trained, no code)

Possible custom add-ons:

- Full model documentation along one/several of the best performing models (deep-dive)

3

Time-stability analysis

Top 5 best performing models along all metrics are "stressed" by being re-trained (with identical parameters from stage 2) on redefined development and out of time sets. Redefined new out of time sets are:

- Consecutive 2-year intervals
- Consecutive 3-year intervals
- Known downturn periods

With existing pre-trained model: deepen analysis on specific time periods that might lie within hold-out sample

Appendix 2: about FCG

About us

FCG

is a leading governance, risk and compliance firm, offering best-in-class services and tech solutions to the European financial industry.
We help navigate a changing and complex regulatory environment, supporting our clients in every step from analysis and advice to implementation and outsourcing

Founded 2008

FCG was founded in 2008 in Stockholm and has grown to become the leading Nordic advisor to businesses in Europe, having supported +700 clients of various size and business models.

Experience

We are a Governance, Risk & Compliance Advisory / Services & Technology firm offering standard- or customized solutions depending on the client needs. FCG has a profound understanding of the challenges that our clients meet.

+450 Employees

FCG has more than 450 employees and grows continuously.

10 Locations

Headquarter in Stockholm and offices in Gothenburg, Malmo, Copenhagen, Oslo, Bergen, Helsinki, Frankfurt, Brussels and Vilnius.

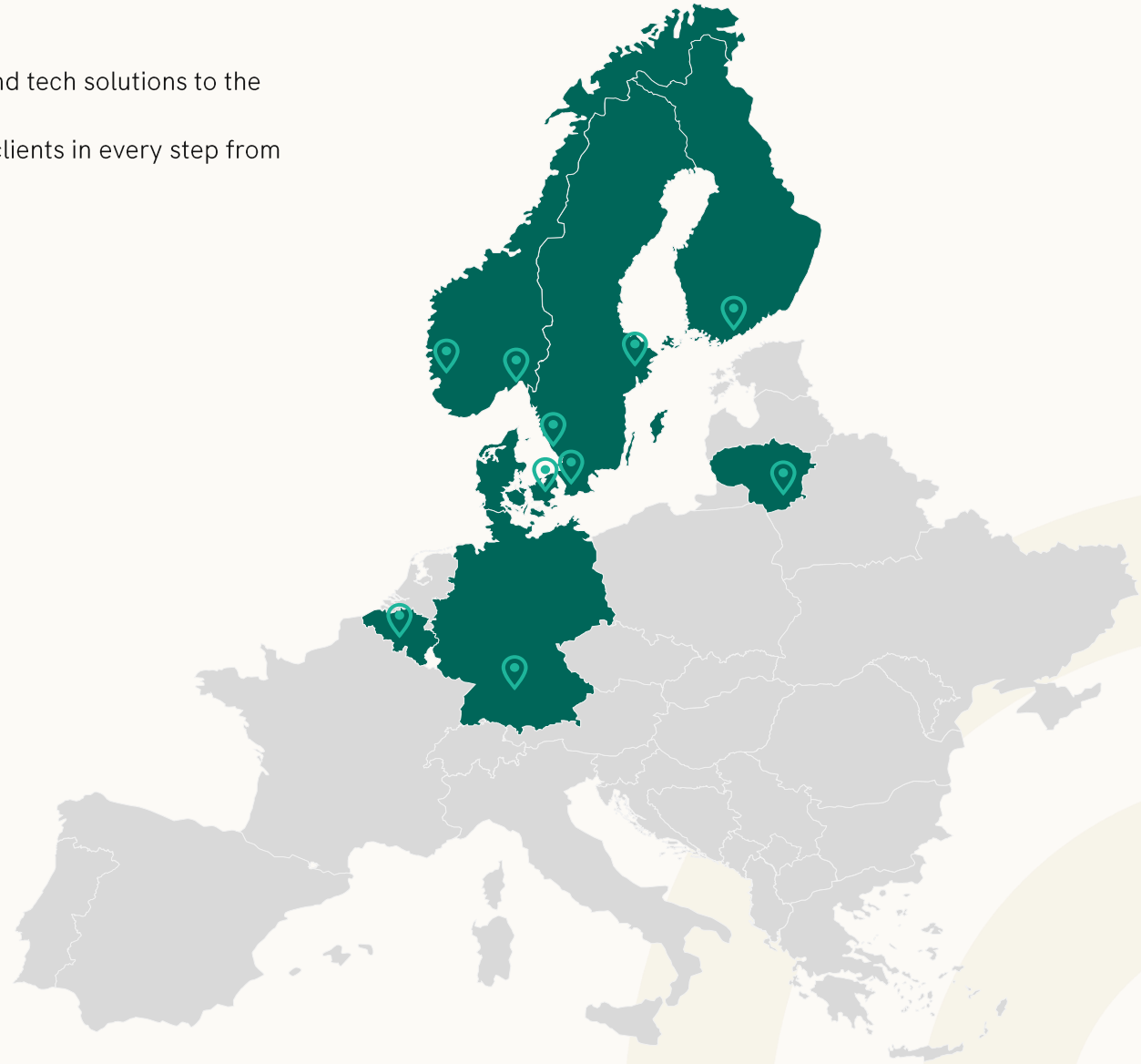

One-stop-shop for mission-critical services across the entire GRC spectrum

FCG has a unique position as a one-stop-shop for GRC solutions and has become the go-to firm for the Nordic financial sector:

Advisory

- Risk & Finance
- AML & Financial Crime Prevention
- Financial Law
- Governance
- Sustainability
- Cyber & Digital Risk Management
- Authorisation and Supervision
- Internal Audit

Tech Solutions

- Quantitative Financial Tools
- Regulatory Software

Services

- Managed Services
- AML & Financial Crime Prevention
- Regulatory Reporting
- Regulatory Monitoring
- Model Validation
- Risk Measurement

Fund Hotel

- Fund Creation & Admin (ManCo)
- Fund Advisory
- Asset Management
- Outsourcing of Risk Management Functions

FCG Team

Risk Expert

Jimmi Brink

Partner

+46 73 253 11 19
jimmi.brink@fcg.se

Competence:

Former regulator and banker with 20+ year of experience within risk management. Extensive know how covering risk strategy & steering as well as more technical aspects of financial risk modeling including IRB and IFRS9.

LGD Expert

Philip Winckle

Senior Adviser

+46 70 784 7654
Philip@winckle.com

Competence:

Many years experience in bank lending, credit approval, loan workout and credit risk modelling. Top level risk management experience including Basel models, risk appetite and stress testing.
Former CEO of industry group The Global Credit Data Consortium.

Risk Expert

Jonas Ljungqvist

Partner & Head of FCG Germany

+49 174 152 42 27
jonas.ljungqvist@fcg-international.com

Competence:

20+ years experience from senior positions in Risk Control and Risk Management in banks with significant hands-on credit risk modelling and validation experience from IFRS9 and IRB.

Model & Architecture Development

Thomas Aldheimer

Data Scientist

+46 72 179 49 79
thomas.aldheimer@fcg.se

Competence:

Several years' experience with machine learning in credit risk modelling. Other areas of machine learning expertise includes natural language processing, regulatory monitoring & horizon scanning, AML, payments performance, fraud and user behavior analytics. Academic background from Accounting and Financial Management (M.Sc.), Astro physics (B.Sc.) and Mathematics (B.Sc.).

Model Development

Christoffer Eduards

Senior Associate

+46 73 230 26 56
christoffer.eduards@fcg.se

Competence:

Credit risk experience including development and validation of models (IRB & IFRS9) encompassing all risk parameters, retail/non-retail and domestic/global portfolios. Background within industrial engineering, financial mathematics and computer science.